**SAGI RAMA KRISHNAM RAJU ENGINEERING COLLEGE (A)**
**[B19HS3102]**
**III B. Tech I Semester (R19) Regular Examinations**
**OPERATIONS RESEARCH**
**Mechanical Engineering**
**MODEL QUESTION PAPER**

**TIME: 3Hrs.** **Max. Marks: 75 M**

Answer **ONE Question** from **EACH UNIT.**
All questions carry equal marks.
*****

| | | | CO | KL | M |
|---|---|---|---|---|---|
| | | **UNIT-I** | | | |
| **1.** | | Suppose an industry is manufacturing tow types of products P1 and P2. The profits per Kg of the two products are Rs.30 and Rs.40 respectively. These two products require processing in three types of machines. The following table shows the available machine hours per day and the time required on each machine to produce one Kg of P1 and P2. Formulate the problem in the form of linear programming model and solve it by Graphical Method. | **1** | **K3** | **15** |

| Profit/Kg | P1<br>Rs.30 | P2<br>Rs.40 | Total available Machine hours/day |
|---|---|---|---|
| Machine 1 | 3 | 2 | 600 |
| Machine 2 | 3 | 5 | 800 |
| Machine 3 | 5 | 6 | 1100 |

| | | | | | |
|---|---|---|---|---|---|
| | | **OR** | | | |
| **2.** | | Find the solution of the following LPP:<br>Maximize $z = 3x_1 + 2x_2 + 2x_3$<br>subject to $x_1 + x_2 + 2x_3 \le 38$<br>$2x_1 + x_2 + x_3 \ge 24$<br>with $x_1 \ge 0,\ x_2 \ge 0,\ x_3 \ge 0$ | **1** | **K3** | **15** |
| | | | | | |
| | | **UNIT-II** | | | |
| **3.** | | Solve the following transportation problem. | **2** | **K3** | **15** |

| Destination → Origin ↓ | $D_1$ | $D_2$ | $D_3$ | $D_4$ | Supply |
|---|---|---|---|---|---|
| $O_1$ | 5 | 3 | 6 | 2 | 19 |
| $O_2$ | 4 | 7 | 9 | 1 | 37 |
| $O_3$ | 3 | 4 | 7 | 5 | 34 |
| Demand | 16 | 18 | 31 | 25 | 90 |

| | | | | | |
|---|---|---|---|---|---|
| | | **OR** | | | |
| **4.** | | Consider the problem of assigning five jobs to five persons. The assignment costs are given as follows. Determine the optimum assignment schedule. | **2** | **K3** | **15** |

| | | | | | |
|---|---|---|---|---|---|
| | | Job<br>Person<br>1 2 3 4 5<br>A 8 4 2 6 1<br>B 0 9 5 5 4<br>C 3 8 9 2 6<br>D 4 3 1 0 3<br>E 9 5 8 9 5 | | | |
| | | | | | |
| | | **UNIT-III** | | | |
| **5.** | | Find the sequence that minimizes the total time required in performing the following jobs on three machines in order ABC. Processing times (in hours) are given in the following table :<br>Job : 1 2 3 4 5<br>Machine A : 8 10 6 7 11<br>Machine B : 5 6 2 3 4<br>Machine C : 4 9 8 6 5 | **3** | **K3** | **15** |
| | | **OR** | | | |
| **6.** | | An auto parts supplier sells Hardy-brand batteries to car dealers and auto mechanics. The annual demand is approximately 1,200 batteries. The supplier pays $28 for each battery and estimates that the annual holding cost is 30 percent of the battery's value. It costs approximately $20 to place an order (managerial and clerical costs). The supplier currently orders 100 batteries Per month.<br>a. Determine the ordering, holding and total inventory costs for the current order quantity.<br>b. Determine the economic order quantity (EOQ).<br>c. How many orders will be placed per year using the EOQ?<br>d. Determine the ordering, holding, and total inventory costs for the EOQ?<br>e. How has ordering cost changed? Holding cost? Total inventory cost? | **3** | **K3** | **15** |
| | | | | | |
| | | **UNIT-IV** | | | |
| **7.** | | Solve the following 6x2 game graphically.<br>$\begin{pmatrix} 1 & -3 \\ 3 & 5 \\ -1 & 6 \\ 4 & 1 \\ 2 & 2 \\ -5 & 0 \end{pmatrix}$ | **4** | **K3** | **15** |
| | | **OR** | | | |
| **8.** | | A dental surgery has two operation rooms. The service times are assumed to be | **4** | **K3** | |

independent, exponentially distributed with mean15 minutes. Andrew arrives when both operation rooms are empty. Bob arrives 10 minutes later while Andrew is still under medical treatment. Another 20 minutes later Caroline arrives and both Andrew and Bob are still under treatment. No other patient arrives during this 30-minute interval.

a. What is the probability that Andrew will be ready before Bob?
b. What is the probability that Caroline will be ready before Andrew?
c. What is the probability that Caroline will be ready before Bob?

## UNIT-V

**9.** The following are the time estimates and the precedence relationships of the activities in a project network: **5** **K3** **15**

| Activity | A | B | C | D | E | F | G | H | I | J | K |
|---|---|---|---|---|---|---|---|---|---|---|---|
| Predecessor activity | - | - | - | A | B | B | C | E | D | F,G | H,I |
| Time estimate (weeks) | 4 | 7 | 3 | 6 | 4 | 7 | 6 | 10 | 3 | 4 | 2 |

Draw the project network diagram. Determine the critical path, the project completion time, Total float, Free float and Independent float.

**OR**

**10.** The time estimates (in weeks) and other characteristics of a project are given below. **5** **K3** **15**

| Activity | 1-2 | 1-6 | 2-3 | 2-4 | 3-5 | 4-5 | 6-7 | 5-8 | 7-8 |
|---|---|---|---|---|---|---|---|---|---|
| Optimistic time | 3 | 2 | 6 | 4 | 8 | 3 | 3 | 2 | 8 |
| Most likely time | 6 | 5 | 12 | 5 | 11 | 7 | 9 | 4 | 16 |
| Pessimistic time | 9 | 8 | 18 | 6 | 14 | 11 | 15 | 6 | 18 |

Determine (i) Critical path (ii) Expected to complete the project and also prepare activity schedule.

**CO-COURSE OUTCOME** **KL-KNOWLEDGE LEVEL** **M-MARKS**

**SAGI RAMA KRISHNAM RAJU ENGINEERING COLLEGE (A)**
**[B19ME3101]**
**III B. Tech I Semester (R19) Regular Examinations**
**IC ENGINES & GAS TURBINES**
**MECHANICAL ENGINEERING**
**MODEL QUESTION PAPER**

**TIME: 3Hrs.** **Max. Marks: 75 M**

Answer **ONE Question** from **EACH UNIT.**
All questions carry equal marks.
*****

| | | | CO | KL | M |
|---|---|---|---|---|---|
| | | **UNIT-I** | | | |
| 1. | a). | Why actual power cycles deviate from theoretical air standard cycles. Discuss in detail the limitations of air standard cycles towards the practical approach. | CO1 | K3 | 7 |
| | b). | Draw the theoretical and actual valve timing diagram for a four stroke C.I. engine and discuss in brief the deviations between the two. | CO1 | K3 | 8 |
| | | **OR** | | | |
| 2. | a). | Distinguish between four stroke and two stroke engines. | CO1 | K2 | 7 |
| | b). | An 8-cylinder, 4-stroke diesel engine has a power output of 368kW at 800rpm. The fuel consumption is 0.238kg/kW-h. The pressure in the cylinder at the beginning of injection is 35bar and the maximum cylinder pressure is 60bar. The injection of fuel is expected to be at 210bar and the maximum pressure at the injector is set to be at about 600bar. Calculate the orifice area required for each injector if the injection takes place over 12°crank angles. Assume the coefficient of discharge for the injector is 0.6, specific gravity of fuel is 0.85 and the atmospheric pressure is 1.013bar. Take the effective pressure difference to be the average pressure difference during the injection period. | CO1 | K3 | 8 |
| | | | | | |
| | | **UNIT-II** | | | |
| 3. | a). | Explain the effect of various engine variables on SI engine knock. | CO2 | K2 | 7 |
| | b). | Describe the different phases of combustion phenomenon in SI engines with suitable sketches. | CO2 | K2 | 8 |
| | | **OR** | | | |
| 4. | a). | Discuss the effect of turbulence and compression ratio on the combustion characteristics in S.I. Engine. | CO2 | K2 | 7 |
| | b). | Explain the influence of operating parameters on knocking in S.I Engine. | CO2 | K2 | 8 |
| | | | | | |
| | | **UNIT-III** | | | |
| 5. | a). | What are different stages of combustion in CI Engine and explain with the help of a p-θ diagram. | CO3 | K2 | 7 |
| | b). | Explain the methods of testing an I.C. Engine performance. | CO3 | K2 | 8 |
| | | **OR** | | | |
| 6. | a). | Explain the various factors that influence the flame speed. | CO3 | K2 | 8 |
| | b). | Write a short note on delay period in CI engines. | CO3 | K2 | 7 |
| | | | | | |

| | | | | | |
|---|---|---|---|---|---|
| | | **UNIT-IV** | | | |
| 7. | a). | Derive the expression for maximum pressure ratio of multistage reciprocating compressor. | CO4 | K3 | 7 |
| | b). | A single acting, single cylinder reciprocating air compressor is compressing 20kg/min. of air from 110kPa. $30^{O}C$ to 600kPa and delivers it to a receiver. Law of compression is $pV^{1.25}$ = constant. Mechanical efficiency is 80%. Find the power input to compressor, neglecting losses due to clearance, leakages, and cooling. | CO4 | K3 | 8 |
| | | **OR** | | | |
| 8. | a). | Explain the working principle of vane type rotary compressor along with a neat diagram. | CO4 | K2 | 7 |
| | b). | A centrifugal compressor handles 150 kg/min. of air. The suction pressure and temperature are 1 bar and $20^{O}C$. The suction velocity is 80 m/s. After compression in the impeller, the conditions, are 1.5 bar and $70^{O}C$ and 220 m/s. Calculate: (i) Isentropic efficiency (ii) Power required to drive the compressor (iii) The overall efficiency of the unit. It may be assumed that K.E. of air gained in the impeller is entirely converted into pressure in the diffuser. | CO4 | K3 | 8 |
| | | | | | |
| | | **UNIT-V** | | | |
| 9. | a). | What is perfect inter cooling. State the advantages and disadvantages of inter-cooling in gasturbine plant. | CO5 | K2 | 7 |
| | b). | A gas turbine plant, that makes use of Brayton cycle in an application, takes in 7M air at 1.2 bar (abs) and $20^{0}C$ temperature and compresses it through a pressure ratio of 8. It is then heated to $850^{0}C$ in a combustion chamber and is expanded back to a pressure of 1.2 bar (abs). Calculate (i)The work done, (ii)The cycle efficiency and (iii)The work ratio. It is given that the isentropic efficiencies of the turbine and the compressor are 80% and 70%respectively. | CO5 | K3 | 8 |
| | | **OR** | | | |
| 10. | a). | What are the types of rocket engines? Explain the working of hybrid rocket engine with a neat sketch. | CO5 | K2 | 7 |
| | b). | A gas turbine unit has a pressure ratio of 6:1 and maximum cycle temperature of $610^{0}C$. The isentropic efficiencies of the compressor and turbine are 0.80 and 0.82, respectively. Air enters the compressor at $15^{0}C$ at the rate of 16kg/s. Calculate: (i) work required for compression; (ii) power developed by the turbine; (iii) Net power output in kilowatts Take Cp=1.005 kJ/kg-k and $\gamma$=1.4 for the compression process, and Cp=1.11kJ/kg-k and $\gamma$=1.333 for the expansion process. | CO5 | K3 | 8 |

**CO-COURSE OUTCOME KL-KNOWLEDGE LEVEL M-MARKS**

**SAGI RAMA KRISHNAM RAJU ENGINEERING COLLEGE (A)**
**[B19ME3102]**
**III B. Tech I Semester (R19) Regular Examinations**
**KINEMATICS OF MACHINES**
**MECHANICAL ENGINEERING DEPARTMENT**
**MODEL QUESTION PAPER**

**TIME: 3Hrs.** **Max. Marks: 75 M**

Answer **ONE Question** from **EACH UNIT.**
All questions carry equal marks.
*****

| | | | CO | KL | M |
|---|---|---|---|---|---|
| | | **UNIT-I** | | | |
| **1.** | **a).** | What is Mechanism? Differentiate between Machine, Mechanism and Structure | **1** | **2** | **7** |
| | **b).** | Explain various types of constrained motions with a neat sketch | **1** | **2** | **8** |
| | | **(OR)** | | | |
| **2.** | **a).** | Explain about mobility of mechanism in Space and plane with Grubler's criterion | **1** | **2** | **5** |
| | **b).** | Sketch and explain all the inversions of a single slider crank chain | **1** | **2** | **10** |
| | | | | | |
| | | **UNIT-II** | | | |
| **3.** | **a).** | State and prove Kennedy's theorem. | **2** | **2** | **5** |
| | **b).** | Fig. shows a mechanism in which OA=QC=100mm,AB=QB=300mm and CD=250mm the crank OA rotates at 150 rpm in the clockwise direction Determine the (i) velocity of slider at D(ii)Angular velocities of links QB and AB (iii)Rubbing velocity at the pin B which is 40mm diameter 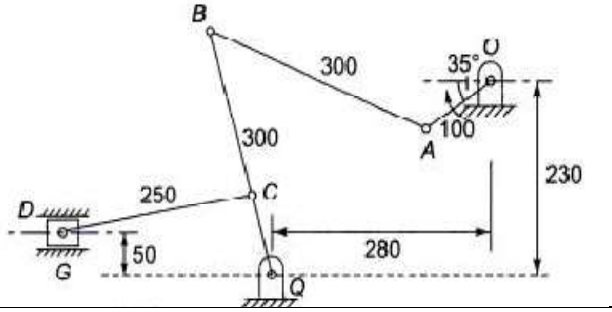  | **2** | **3** | **10** |
| | | | | | |
| **4.** | **a).** | Explain the concept of Coriolis component of acceleration. | **2** | **2** | **7** |
| | **b).** | PQRS is a four bar chain as shown in fig. with links PS fixed the length of the links are PQ=62.5mm, QR=175mm,RS=112.5mm and PS=200MM.The crank PQ rotates at 10rad/s clockwise Draw the velocity and acceleration diagram when angle PQS=$60^0$ and Q and R lie on same side of PS. Calculate the angular velocity and angular acceleration of links QR and RS | **2** | **3** | **8** |

| | | | | | |
|---|---|---|---|---|---|
| | | 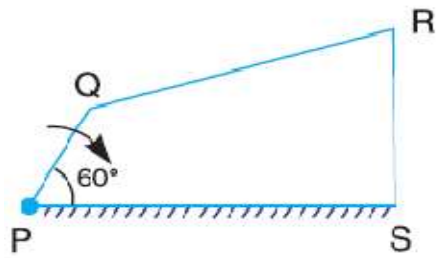 | | | |
| | | | | | |
| | | **UNIT-III** | | | |
| **5.** | **a).** | Explain about Scott Russel and modified Scott Russel mechanisms with neat sketch | **3** | **2** | **7** |
| | **b).** | Sketch a Paucellier mechanism. Based on mathematical condition examine either it traces a straight line path or not | **3** | **4** | **8** |
| | | **(OR)** | | | |
| **6.** | **a).** | Derive an expression for correct steering | **3** | **3** | **7** |
| | **b).** | Derive an Expression for the ratio of shaft velocities for the Hooke's joint (ω / ω1) | **3** | **3** | **8** |
| | | | | | |
| | | **UNIT-IV** | | | |
| **7.** | **a).** | What is a cam? classify various types of cams. | **4** | **4** | **5** |
| | **b).** | Design a cam for operating the exhaust valve of an oil engine. It is required to give equal uniform acceleration and retardation during opening and closing of the valve each of which corresponds to 60° of cam rotation. The valve must remain in the fully open position for20° of cam rotation.<br>The lift of the valve is 37.5 mm and the least radius of the cam is 40 mm. The follower is provided with a roller of radius 20 mm and its line of stroke passes through the axis of the cam. | **4** | **4** | **10** |
| | | **OR** | | | |
| **8.** | **a).** | Explain about types of followers | **4** | **2** | **5** |
| | **b).** | A cam is to be designed for a knife edge follower with the following data :<br>1. Cam lift = 40 mm during 90° of cam rotation with simple harmonic motion.<br>2. Dwell for the next 30°.<br>3. During the next 60° of cam rotation, the follower returns to its original position with simple harmonic motion.<br>4. Dwell during the remaining 180°.<br>Design the profile of the cam when<br>(a) the line of stroke of the follower passes through the axis of the cam shaft, and The radius of the base circle of the cam is 40 mm. Determine the maximum velocity and acceleration of the follower during its ascent and descent, if the cam rotates at 240 r.p.m. | **4** | **4** | **10** |
| | | | | | |
| | | **UNIT-V** | | | |
| **9.** | **a).** | Derive an expression for constant velocity ratio of a given meshed gears | **4** | **4** | **6** |

| | | | | | |
|---|---|---|---|---|---|
| | **b).** | A pair of involute spur gears with $16^0$ pressure angles and pitch of module 6mm is in mesh. the no of teeth on pinion is 16 and its rotational speed is 240r.p.m. when the gear ratio is 1.75,find in order that the interference is just avoided; (i)the addendum on pinion and gear wheel(ii)the length of path of contact | **4** | **3** | **9** |
| | | **(OR)** | | | |
| **10.** | **a).** | What is Gear train? Explain about various Gear trains with neat sketch | **4** | **2** | **6** |
| | **b).** | An epicyclic gear consist of a pinion, a wheel of 40 teeth and an annulus with 84 teeth concentric with the wheel .The pinion gears with the wheel and annulus. The arm that carries the axis of the pinion rotates at 100rpm.If the annulus is fixed, find the speed of the wheel. | **4** | **3** | **9** |

**CO-COURSE OUTCOME KL-KNOWLEDGE LEVEL M-MARKS**

**SAGI RAMA KRISHNAM RAJU ENGINEERING COLLEGE (A)**
**[B19ME3103]**
**III B. Tech I Semester (R19) Regular Examinations**
**DESIGN OF MACHINE ELEMENTS**
**Mechanical Engineering**
**MODEL QUESTION PAPER**

**TIME: 3Hrs.** **Max. Marks: 75 M**

Answer **ONE Question** from **EACH UNIT.**
All questions carry equal marks.
Data Book is NOT ALLOWED
*****

| | | | CO | KL | M |
|---|---|---|---|---|---|
| | | **UNIT-I** | | | |
| **1.** | **a).** | Explain the basic procedure for design of machine element | **1** | **2** | **7** |
| | **b).** | Explain BIS designation of steels | **1** | **2** | **8** |
| | | **OR** | | | |
| **2.** | **a).** | Explain maximum principle strain theory & maximum strain energy theory. | **2** | **2** | **5** |
| | **b).** | A cylindrical shaft made of steel of yield strength 700MPa is subjected to static loads consisting of bending moment 10kN-m and a torsional moment 30kN-m. Determine the diameter of the shaft using two different theories of failure, and assuming a factor of safety of 2. Take E = 210GPa and Poisson's ratio = 0.25. | **2** | **3** | **10** |
| | | | | | |
| | | **UNIT-II** | | | |
| **3.** | **a).** | Explain the methods to reduce Stress concentration | **2** | **2** | **5** |
| | **b).** | A steel rod is subjected to a reversed axial load of 180kN. Find the diameter of the rod for a factor of safety of 2. Neglect column action. The material has an ultimate tensile strength of 1070MPa and yield strength of 910MPa. The endurance limit in reversed bending may be assumed to be one-half of the ultimate tensile strength. Other correction factors may be taken as follows: For axial loading = 0.7; For machined surface = 0.8 ; For size = 0.85 ; For stress concentration = 1.0 | **2** | **3** | **10** |
| | | **OR** | | | |
| **4.** | **a).** | A hot rolled steel shaft is subjected to a torsional moment that varies from 330 N-m clockwise to 110 N-m counterclockwise and an applied bending moment at a critical section varies from 440 Nm to – 220 Nm. The shaft is of uniform cross-section and no keyway is present at the critical section. Determine the required shaft diameter. The material has an ultimate strength of550 $MN/m^2$ and a yield strength of 410 $MN/m^2$. Take the endurance limit as half the ultimate strength, factor of safety of 2, size factor of 0.85 and a surface finish factor of 0.62. | **2** | **3** | **15** |
| | | | | | |
| | | **UNIT-III** | | | |
| **5.** | **a).** | Derive the equation for determining the size of the bolt when eccentric load is acting perpendicular to the axis of the bolt | **3** | **3** | **8** |
| | **b).** | A crane run away bracket is fastened to roof truss by means of two identical bolts, as shown in the Fig. Determine the major diameter of the bolts which are made up of steel 30C8 ($S_{yt}$=450N/$mm^2$) and the factor of safety as 6. | **3** | **3** | **7** |

| | | | | | |
|---|---|---|---|---|---|
| | | 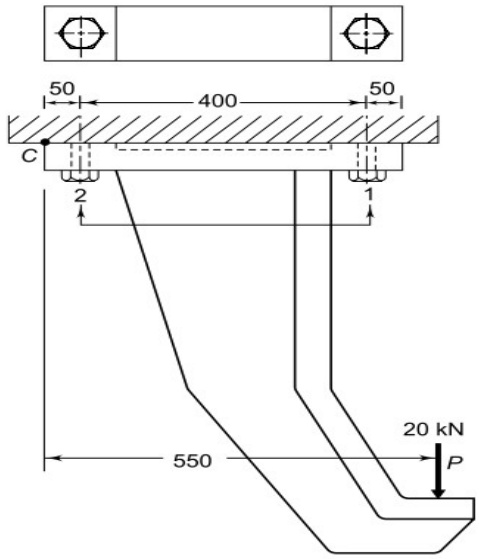 | | | |
| | | **OR** | | | |
| **6.** | | A rectangular steel plate is welded as a cantilever to a vertical column and supports a single concentrated load P, as shown in Fig.<br>Determine the weld size if shear stress in the same is not to exceed 140MPa<br> 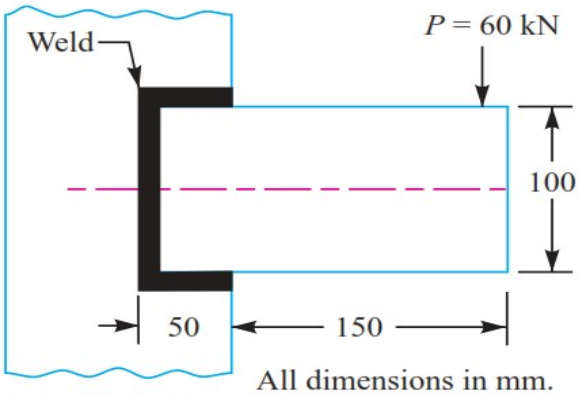 | **3** | **3** | **15** |
| | | | | | |
| | | **UNIT-IV** | | | |
| **7.** | | A steel solid shaft transmitting 15 kW at 200r.p.m. is supported on two bearings 750 mm apart and has two gears keyed to it. The pinion having 30 teeth of 5 mm module is located 100 mm to the left of the right hand bearing and delivers power horizontally to the right. The gear having 100 teeth of 5 mm module is located 150 mm to the right of the left hand bearing and receives power in a vertical direction from below. Using an allowable stress of 54MPa in shear, determine the diameter of the shaft. | **4** | **4** | **15** |
| | | **OR** | | | |
| **8.** | | Design a cast iron flange coupling for a mild steel shaft transmitting 90 kW at 250r.p.m. The allowable shear stress in the shaft is 40MPa and the angle of twist is not to exceed 1° in a length of 20 diameters. The allowable shear stress in the coupling bolts is 30MPa | **4** | **4** | **15** |
| | | | | | |

| | | | | | |
|---|---|---|---|---|---|
| | | **UNIT-V** | | | |
| **9.** | **a).** | Design a helical compression spring for a maximum load of 1000 N for a deflection of 25 mm using the value of spring index as 5. The maximum permissible shear stress for spring wire is 420MPa and modulus of rigidity is 84kN/mm$^2$**.** | **5** | **4** | **8** |
| | **b).** | A rail wagon of mass 20tonnes is moving with a velocity of 2m/s. It is brought to rest by two buffers with springs of 300 mm diameter. The maximum deflection of springs is 250 mm. The allowable shear stress in the spring material is 600MPa. Design the spring for the buffers. | **5** | **4** | **7** |
| | | **OR** | | | |
| **10.** | **a).** | Explain about nipping of leaf springs | **5** | **2** | **5** |
| | **b).** | Design a leaf spring for the following specifications :<br>Total load = 140kN; Number of springs supporting the load = 4; Maximum number of leaves= 10; Span of the spring = 1000mm; Permissible deflection= 80 mm. Take Young's modulus, E = 200kN/mm$^2$ and allowable stress in spring material as 600MPa. | **5** | **4** | **10** |

**CO-COURSE OUTCOME KL-KNOWLEDGE LEVEL M-MARKS**

**SAGI RAMA KRISHNAM RAJU ENGINEERING COLLEGE (A)**
**[B19ME3104]**
**III B. Tech I Semester (R19) Regular Examinations**
**FLUID MACHINERY & SYSTEMS**
**Mechanical Engineering**
**MODEL QUESTION PAPER**

**Time: 3Hrs.** **Max. Marks: 75**

Answer **ONE Question** from **EACH UNIT.**
All questions carry equal marks.
*****

| | | | CO | KL | M |
|---|---|---|---|---|---|
| | | **UNIT-I** | | | |
| **1.** | **a).** | Derive an expression for force exerted by a jet of water on a series of radial curved vanes. | 1 | 2 | 7 |
| | **b).** | A jet of water having a velocity of 30 m/sec, strikes a series of radial curved vanes mounted on a wheel which is rotating at 200 rpm. The jet makes an angle of $20^0$ with the tangent to the wheel at inlet and leaves the wheel with a velocity of 5 m/sec at an angle of $130^0$ to the tangent to the wheel at outlet. Water is flowing from outward in radial direction. The outer and inner radii of the wheel are 0.5 m and 0.25 m respectively. Determine (i) vane angles at inlet and outlet (ii) work done per second per unit weight of water and (iii) efficiency of the wheel. | 1 | 2 | 8 |
| | | **OR** | | | |
| **2.** | **a).** | Derive an expression for jet propulsion of the ship if the water is taken from (i) sides of the ship (ii) front of the ship. | 1 | 2 | 7 |
| | **b).** | The water in a jet propelled boat is drawn through inlet openings facing the direction of motion of the ship. The boat is moving in sea-water with a speed of 40km/hr. The absolute velocity of the jet of the water discharged at the back is 40 m/sec and the area of the jet of water is 0.04 $m^2$. Find the propelling force and efficiency of propulsion. | 1 | 2 | 8 |
| | | **UNIT-II** | | | |
| **3.** | **a).** | Obtain an expression for the work done per second by water on runner of a Pelton wheel. Also obtain the condition for maximum efficiency. | 2 | 2 | 7 |
| | **b).** | A Kaplan turbine working under a head of 29 m develops 1287.5 kW shaft power. If the speed ratio is equal to 2.1, flow ratio = 0.62, diameter of the boss = 0.34 times the diameter of the runner and overall efficiency of the turbine = 89%, find the diameter of the runner and the speed of turbine. | 2 | 3 | 8 |
| | | **OR** | | | |

| | | | | | |
|---|---|---|---|---|---|
| **4.** | **a).** | Define the specific speed of a turbine. Derive an expression for the specific speed. | 2 | 3 | 7 |
| | **b).** | A turbine is to operate under a head of 25 m at 200 rpm. The discharge is 9 $m^3$/sec. If the turbine efficiency is 90%, determine (i) specific speed of the turbine (ii) power generated (iii) performance under a head of 20m. Also state the type of turbine. | 2 | 3 | 8 |
| | | **UNIT-III** | | | |
| **5.** | **a).** | Obtain an expression for the work done by the impeller of a centrifugal pump. | 3 | 2 | 7 |
| | **b).** | The impeller of a centrifugal pump has an external diameter of 450 mm and internal diameter of 200 mm and it runs at 1440 rpm. Assuming a constant radial flow through the impeller at 2.5 m/sec and that the vanes at exit are set back at an angle of $25^0$, determine (i) Inlet vane angle (ii) The angle absolute velocity of water at exit makes with the tangent (iii) The work done per N of water. | 3 | 4 | 8 |
| | | **OR** | | | |
| **6.** | **a).** | Define minimum starting speed of a centrifugal pump. Obtain an expression for the same. | 3 | 2 | 7 |
| | **b).** | The diameter of an impeller of a centrifugal pump at inlet and outlet are 300 mm and 600 mm respectively. The velocity of flow at outlet are 2.5 m/sec and vanes are set back at an angle of $45^0$ at outlet. Determine the minimum starting speed of the pump if the manometric efficiency is 75%. | 3 | 4 | 8 |
| | | **UNIT-IV** | | | |
| **7.** | **a).** | Obtain an expression for work done by the reciprocating pump. | 4 | 2 | 7 |
| | **b).** | A single-acting reciprocating pump, running at 50 rpm delivers 0.00736 $m^3$/sec of water. The diameter of the piston is 200 mm and stroke length are 300 mm. The suction and delivery heads are 3.5 m and 11.5 m respectively. Determine<br>Theoretical discharge (ii) Coefficient of discharge<br>(iii) % Slip (iv) Power required to run the pump | 4 | 4 | 8 |
| | | **OR** | | | |
| **8.** | **a).** | Derive an expression for maximum speed of a reciprocating pump. | 4 | 2 | 7 |

| | | | | | |
|---|---|---|---|---|---|
| | **b).** | A single-acting reciprocating pump has a plunger 100 mm diameter and a stroke length of 200 mm. The centre of the pump is 4 m above the water level in the sump and 14m below the level of water in a tank to which water is delivered by the pump. The diameter and length of suction pipe are 40 mm and 6 m while of the delivery pipe are 30 mm and 18 m respectively. Determine the maximum speed at which the pump may run without separation, if separation occurs at $7.84 \times 10^4$ $N/m^2$ below the atmospheric pressure. Take atmospheric pressure head as 10.3 m of water. | 4 | 4 | 8 |
| | | **UNIT-V** | | | |
| **9.** | | Explain the following with neat sketches<br>Hydraulic accumulator<br>Hydraulic ram | 5 | 2 | 15 |
| | | **OR** | | | |
| **10.** | **a).** | Explain fluid coupling | 5 | 2 | 7 |
| | **b).** | Find the efficiency of a hydraulic crane, which is supplied 400 litres of water under a pressure of 490.5 $N/cm^2$ for lifting a weight of 98.1 kN through a height of 10 m. | 5 | 3 | 8 |

**CO-Course Outcome KL-Knowledge Level M-Marks**

**SAGI RAMA KRISHNAM RAJU ENGINEERING COLLEGE (A)**
**[B19ME3105]**
**III B. Tech I Semester (R19) Regular Examinations**
**MECHANICAL MEASUREMENTS AND METROLOGY**
**Department of Mechanical Engineering**
**MODEL QUESTION PAPER**

**TIME: 3Hrs.** **Max. Marks: 75 M**

Answer **ONE Question** from **EACH UNIT.**
All questions carry equal marks.
*****

| | | | CO | KL | M |
|---|---|---|---|---|---|
| | | **UNIT-I** | | | |
| **1.** | **a).** | Explain static performance characteristics of an instrument in detail. | **1** | **K3** | **7** |
| | **b).** | List out the different torque measuring methods? And Explain any one method with neat sketch. | **1** | **K3** | **8** |
| | | **OR** | | | |
| **2.** | **a).** | Briefly explain the force measurement with neat sketch. | **1** | **K3** | **7** |
| | **b).** | Explain the construction and working principle of McLeod gauge. | **1** | **K3** | **8** |
| | | | | | |
| | | **UNIT-II** | | | |
| **3.** | **a).** | Explain interchangeability with suitable example and mention its advantages and disadvantages. | **2** | **K3** | **7** |
| | **b).** | Explain construction and working of Twisted strip comparator with a neat sketch. | **2** | **K3** | **8** |
| | | **OR** | | | |
| **4.** | **a).** | Describe Taylor's principle of Gauge Design with neat sketch. | **2** | **K3** | **8** |
| | **b).** | Define fit, and classify the types of fits in brief. | **2** | **K3** | **7** |
| | | | | | |
| | | **UNIT-III** | | | |
| **5.** | **a).** | Explain measurement of effective diameter of a screw thread with neat sketch. | **3** | **K3** | **7** |
| | **b).** | Illustrate construction and working of a Tool maker's microscope. | **3** | **K3** | **8** |
| | | **OR** | | | |
| **6.** | **a).** | Explain measurement of gear tooth thickness with a neat sketch. | **3** | **K3** | **7** |
| | **b).** | Illustrate construction and working of an Autocollimator. | **3** | **K3** | **8** |
| | | | | | |
| | | **UNIT-IV** | | | |
| **7.** | **a).** | Explain the acceptance tests to be performed on a lathe. | **4** | **K4** | **8** |
| | **b).** | Explain various factors effecting surface roughness. | **4** | **K4** | **7** |
| | | **OR** | | | |
| **8.** | **a).** | With the help of a neat sketch explain any one surface roughness measuring instrument. | **4** | **K4** | **7** |
| | **b).** | Explain any two alignment tests performed on milling machine with neat sketch. | **4** | **K4** | **8** |
| | | | | | |
| | | **UNIT-V** | | | |
| **9.** | **a).** | Define optical fibers. Explain its classifications and properties. | **5** | **K3** | **7** |
| | **b).** | Briefly explain length/displacement measurement with help of a neat sketch. | **5** | **K3** | **8** |

| | | | | | |
|---|---|---|---|---|---|
| | | **OR** | | | |
| **10.** | **a).** | Explain fiber optic sensor configuration with a neat sketch. | **5** | **K3** | **7** |
| | **b).** | Explain any one vibration measurement technique with a neat sketch. | **5** | **K3** | **8** |

**CO-COURSE OUTCOME** **KL-KNOWLEDGE LEVEL** **M-MARKS**

**SAGI RAMA KRISHNAM RAJU ENGINEERING COLLEGE (A)**
**[B19ME3201]**
**III B. Tech II Semester (R19) Regular Examinations**
**INDUSTRIAL ENGINEERING AND MANAGEMENT**
**Mechanical Engineering Department**
**MODEL QUESTION PAPER**

**TIME: 3Hrs.** **Max. Marks: 75 M**

Answer **ONE Question** from **EACH UNIT.**
All questions carry equal marks.
*****

| | | | CO | KL | M |
|---|---|---|---|---|---|
| | | **UNIT-I** | | | |
| 1. | a). | Articulate Henry Fayol's principles of management in brief. | CO1 | K3 | 8 |
| | b). | Classify and explain the types of Organization. | CO1 | K2 | 7 |
| | | **OR** | | | |
| 2. | a). | Discuss any three theories of Motivation. | CO1 | K2 | 8 |
| | b). | Establish the causes of Industrial disputes. | CO1 | K2 | 7 |
| | | | | | |
| | | **UNIT-II** | | | |
| 3. | a). | Elaborate the different types of production. | CO2 | K3 | 7 |
| | b). | Explain briefly about product design and development. | CO2 | K2 | 8 |
| | | **OR** | | | |
| 4. | a). | Articulate Loading and scheduling | CO2 | K3 | 8 |
| | b). | What is Forecasting? What are different forecasting techniques? Explain | CO2 | K2 | 7 |
| | | | | | |
| | | **UNIT-III** | | | |
| 5. | a). | Summarize the factors affecting location of plant layout. | CO3 | K2 | 7 |
| | b). | Enunciate the different types of plant layout. | CO3 | K3 | 8 |
| | | **OR** | | | |
| 6. | a). | Articulate the principles of Material handling and concept of Unit Load, Containerization. | CO3 | K3 | 8 |
| | b). | Explain any three types of Material handling equipment and their industrial applications. | CO3 | K2 | 7 |
| | | | | | |
| | | **UNIT-IV** | | | |
| 7. | a). | Demonstrate the basic steps involved in Method Study. | CO4 | K2 | 7 |
| | b). | Prepare the principles of Motion Economy in brief. | CO4 | K3 | 8 |
| | | **OR** | | | |
| 8. | a). | Explain<br>1) SIMO Chart 2) Therbligs 3) Process Charts | CO4 | K2 | 7 |
| | b). | An Element is observed to be carried out in 0.8 minutes. Given pace rating is 110% and the secondary adjustment by 20% Calculate the base time on any fair day. If 0.2 minute per element is given as allowance, Calculate the standard time taken for 20 repeated actions? | CO4 | K4 | 8 |
| | | | | | |
| | | **UNIT-V** | | | |
| 9. | a). | Enumerate the objectives and steps involved in Purchasing Department. | CO5 | K3 | 7 |
| | b). | Determine the E.O.Q and calculate how frequently orders be placed. An aircraft company uses a certain part at a constant rate of 2000 units per year. | CO5 | K4 | 8 |

| | | | | | |
|---|---|---|---|---|---|
| | | Each unit costs Rs.25 and the company personnel estimate that it costs Rs 120 to place an order and carrying cost of inventory is 15% per year. | | | |
| | | **OR** | | | |
| 10. | a). | Summarize Single and Double Sampling Plans with neat schematics. | CO5 | K2 | 7 |
| | b). | Draw p-chart and complete with a conclusion from the chart The below given table is a given result of inspection of 20 samples of 100 items each taken on 20 working days | CO5 | K4 | 8 |

| Sample no | 1 | 2 | 3 | 4 | 5 | 6 | 7 | 8 | 9 | 10 |
|---|---|---|---|---|---|---|---|---|---|---|
| No. of defectives | 0 | 2 | 4 | 6 | 6 | 4 | 0 | 2 | 4 | 8 |
| Sample no | 11 | 12 | 13 | 14 | 15 | 16 | 17 | 18 | 19 | 20 |
| No. of defectives | 8 | 0 | 4 | 6 | 14 | 0 | 2 | 2 | 6 | 2 |

**CO-COURSE OUTCOME** **KL-KNOWLEDGE LEVEL** **M-MARKS**

**SAGI RAMA KRISHNAM RAJU ENGINEERING COLLEGE (A)**
**[B19ME3202]**
**III B. Tech II Semester (R19) Regular Examinations**
**DYNAMICS OF MACHINES**
**MECHANICAL ENGINEERING DEPARTMENT**
**MODEL QUESTION PAPER**

**TIME: 3Hrs.** **Max. Marks: 75 M**

Answer **ONE Question** from **EACH UNIT.**
All questions carry equal marks.
*****

| | | | CO | KL | M |
|---|---|---|---|---|---|
| | | **UNIT-I** | | | |
| **1.** | **a).** | Explain the gyroscopic couple effect on the motion of an aircraft while taking a turn. | **1** | **2** | **7** |
| | **b).** | The turbine rotor of a ship having a mass of 200kg rotates at 2000rpm and its radius of gyration is 0.3m if the rotation of the rotor is clock wise looking from the aft, determine the gyroscopic couple set by the rotor when (i) ship takes a left-hand turn at a radius of 300m at a speed of 30 kmph (ii) ship pitches with the bow raising at an angular velocity of 1 rad/sec (iii) ship rolls at an angular velocity of 0.1 rad/sec | **1** | **3** | **8** |
| | | **OR** | | | |
| **2.** | **a).** | Explain the effect of the gyroscopic couple on the reaction of the four wheels of a vehicle negotiating a curve | **1** | **2** | **8** |
| | **b).** | Calculate the angle of inclination with respect to the vertical of a two-wheeler negotiating a turn. Given: combined mass of the vehicle with its rider 250 kg; moment of inertia of the engine flywheel 0.3 kg-m$^2$; moment of inertia of each road wheel 1 kg-m$^2$; speed of engine flywheel 5 times that of road wheels and in the same direction; height of centre of gravity of rider with vehicle 0.6 m; two-wheeler speed 90 km/h; wheel radius 300 mm; radius of turn 50 m. | **1** | **3** | **7** |
| | | | | | |
| | | **UNIT-II** | | | |
| **3.** | **a).** | Explain the method of balancing of different masses revolving in the same plane. | **2** | **2** | **7** |
| | **b).** | A shaft carries four masses A, B, C and D of magnitude 200 kg, 300 kg, 400 kg and 200 kg respectively and revolving at radii 80 mm, 70 mm, 60 mm and 80 mm in planes measured from A at 300 mm, 400 mm and 700 mm. The angles between the cranks measured anticlockwise are A to B 45°, B to C 70° and C to D 120°. The balancing masses are to be placed in planes X and Y. The distance between the planes A and X is 100 mm, between X and Y is 400mm and between Y and D is 200 mm. If the balancing masses revolve at a radius of 100 mm, determine their magnitudes and angular positions. | **2** | **3** | **8** |
| | | **OR** | | | |
| **4.** | **a).** | Inferred the following expressions, for an uncoupled two-cylinder locomotive engine:(a) Variation is tractive force; (b) Swaying couple; and (c) Hammer blow. | **2** | **4** | **7** |
| | **b).** | A four crank engine has the two outer cranks set at 120° to each other, and their reciprocating masses are each 400 kg. The distance between the planes of rotation ofadjacent cranks are 450 mm, 750 mm and 600 | **2** | **4** | **8** |

| | | | | | |
|---|---|---|---|---|---|
| | | mm. If the engine is to be in complete primary balance, calculate the reciprocating mass and the relative angular position for each of the inner cranks. If the length of each crank is 300 mm, the length of each connecting rod is 1.2 m and the speed of rotation is 240 r.p.m., what is the maximum secondary unbalanced force? | | | |
| | | | | | |
| | | **UNIT-III** | | | |
| **5.** | **a).** | Show the natural frequency of free longitudinal vibrations of single degree freedom system by Equilibrium method. | **3** | **3** | **7** |
| | **b).** | The measurements on a mechanical vibrating system show that it has a mass of 8 kg and that the springs can be combined to give an equivalent spring of stiffness5.4 N/mm. If the vibrating system have a dashpot attached which exerts a force of 40 N when the mass has a velocity of 1 m/s, solve: 1. critical damping coefficient, 2. damping factor, 3. Logarithmic decrement, and 4. ratio of two consecutive amplitudes. | **3** | **3** | **8** |
| | | **OR** | | | |
| **6.** | **a).** | Show an expression for the frequency of free torsional vibrations for a shaft fixed at one end and carrying a load on the free end | **3** | **3** | **7** |
| | **b).** | A shaft 50 mm diameter and 3 metres long is simply supported at the ends and carries three loads of 1000 N, 1500 N and 750 N at 1 m, 2 m and 2.5 m from the left support. The Young's modulus for shaft material is 200 GN/m2. Determine the frequency of transverse vibration. | **3** | **3** | **8** |
| | | | | | |
| | | **UNIT-IV** | | | |
| **7.** | **a).** | Show an expression for single collar bearing (i)Uniform pressure (ii) Uniform wear | **3** | **3** | **8** |
| | **b).** | The mean diameter of a square threaded screw jack is 50 mm. The pitch of the thread is 10 mm. The coefficient of friction is 0.15. What force must be applied at the end of a0.7 m long lever, which is perpendicular to the longitudinal axis of the screw to raise a load of 20 KN and to lower it? | **3** | **3** | **7** |
| | | **OR** | | | |
| **8.** | **a).** | Illustrate the single plate clutch and antifriction bearings with help of neat sketch | **3** | **3** | **8** |
| | **b).** | A conical pivot supports a load of 20 kN, the cone angle is 120º and the intensity of normal pressure is not to exceed 0.3 N/mm2. The external diameter is twice the internal diameter. Find the outer and inner radii of the bearing surface. If the shaft rotates at 200 r.p.m. and the coefficient of friction is 0.1, calculate the power absorbed in friction. Assume uniform pressure. | **3** | **3** | **7** |
| | | | | | |
| | | **UNIT-V** | | | |
| **9.** | **a).** | Inferred the expression for a velocity and acceleration of the piston with Approximate Analytical method | **4** | **4** | **7** |
| | **b).** | The turning moment diagram for a petrol engine is drawn to the following scales: Turning moment, 1 mm = 5 N-m; crank angle, 1 mm = 1°. The turning moment diagram repeats itself at every half | **4** | **3** | **8** |

| | | | | | |
|---|---|---|---|---|---|
| | | revolution of the engine and the areas above and below the mean turning moment line taken in order are 295, 685, 40, 340, 960, 270 mm2. The rotating parts are equivalent to a mass of 36 kg at a radius of gyration of 150 mm. Determine the coefficient of fluctuation of speed when the engine runs at 1800 r.p.m. | | | |
| | | **OR** | | | |
| **10.** | **a).** | Explain the sensitiveness, isochronism and hunting of a governor | **4** | **2** | **7** |
| | **b).** | A Porter governor has equal arms each 250 mm long and pivoted on the axis of rotation. Each ball has a mass of 5 kg and the mass of the central load on the sleeve is 25 kg. The radius of rotation of the ball is 150 mm when the governor begins to lift and 200 mm when the governor is at maximum speed. Determine the minimum and maximum speeds and range of speed of the governor. | **4** | **3** | **8** |

**CO-COURSE OUTCOME KL-KNOWLEDGE LEVEL M-MARKS**

**SAGI RAMA KRISHNAM RAJU ENGINEERING COLLEGE (A)**
**[B19ME3203]**
**III B. Tech II Semester (R19) Regular Examinations**
**MACHINE DESIGN**
**Mechanical Engineering Department**
**MODEL QUESTION PAPER**

**TIME: 3Hrs.** **Max. Marks: 75 M**

Answer **ONE Question** from **EACH UNIT.**
All questions carry equal marks.
Data Book is NOT ALLOWED
*****

| | | | CO | KL | M |
|---|---|---|---|---|---|
| | | **UNIT-I** | | | |
| **1.** | **a).** | Explain about Lewis equation | **1** | **2** | **5** |
| | **b).** | A gear drive is required to transmit a maximum power of 22.5 kW. The velocity ratio is 1:2 and r.p.m. of the pinion is 200. The approximate centre distance between the shafts may be taken as 600 mm. The teeth have 20° stub involute profiles. The static stress for the gear material (which is cast iron) may be taken as 60MPa and face width as 10 times the module. Find the module, face width and number of teeth on each gear. Check the design for dynamic loads. The deformation or dynamic factor in the Buckingham equation may be taken as 80. | **1** | **4** | **10** |
| | | **OR** | | | |
| **2.** | | Pair of helical gears are to transmit 20kW. The teeth are 20° stub in diametral plane and have a helix angle of 45°. The pinion has 60mm pitch diameter and operates at 5600rpm. The gear has 240mm pitch diameter. If the gears are made of same material having allowable static strength of 100MPa; determine a suitable module and face width check the gears for dynamic & wear loads, given $\sigma_{es}$ = 618MPa. | **1** | **4** | **15** |
| | | | | | |
| | | **UNIT-II** | | | |
| **3.** | | A four stroke internal combustion engine has the following specifications:Brake power = 7.5kW; Speed = 1000r.p.m; Indicated mean effective pressure = 0.35 N/mm$^2$; Maximum gas pressure = 3.5 N/mm$^2$; Mechanical efficiency = 80 %.<br>Determine: 1. The dimensions of the cylinder, if the length of stroke is 1.4 times the bore of the cylinder; 2. Wall thickness of the cylinder, if the hoop stress is 35MPa; 3. Thickness of the cylinder head and the size of studs when the permissible stresses for the cylinder head and stud materials are 45MPaand 65MPa respectively. | **2** | **4** | **15** |
| | | **OR** | | | |
| **4.** | | Design connecting rod for a petrol engine from the following data:<br>Diameter of the piston = 110 mm; Mass of the reciprocating parts = 2 kg; Length of the connecting rod = 325 mm; Stroke length = 150mm; R.P.M. = 1500; Maximum explosion pressure =2.5N/mm$^2$. | **2** | **4** | **15** |
| | | | | | |
| | | **UNIT-III** | | | |
| **5.** | | A cone clutch is used to connect to an electric motor running at 1440 rpm which is stationary. The machine is equivalent to a rotor of mass 150kg and radius of gyration as 250mm. The machine has to be | **3** | **4** | **15** |

| | | | | | |
|---|---|---|---|---|---|
| | | brought to a full speed of 1440rpm from stationary condition in 40sec.The semi cone angle is $12.5^0$,The mean radius of the clutch is twice the face width. The coefficient of friction is 0.2 and the normal intensity of pressure between the surfaces should not exceed $0.1N/mm^2$.Assuming uniform wear, calculate<br>a)Inner and outer diameters<br>b)Face width of friction lining<br>c)Force required to engage the clutch<br>d)Amount of heat generated for each engagement of the clutch | | | |
| | | **OR** | | | |
| **6.** | | A single block brake, as shown in Fig, has a drum diameter of 720 mm. If the brake sustains 225 N-m torque at 500r.p.m.; find: (a) the required force (P) to apply the brake for clockwise rotation of the drum; (b) the required force (P) to apply the brake for counter clockwise rotation of the drum;(c) the location of the fulcrum to make the brake self-locking for clockwise rotation of the drum; and The coefficient of friction may be taken as 0.3.<br> 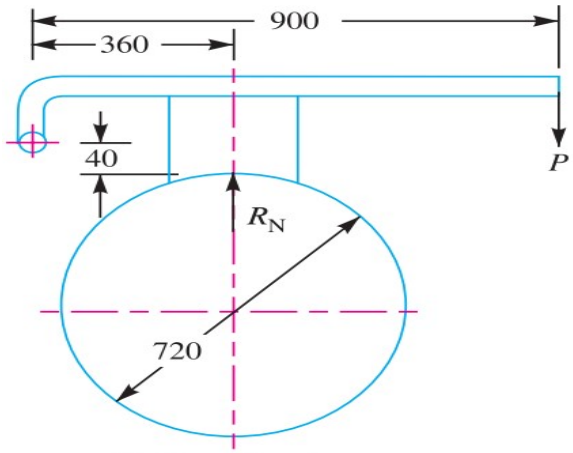 <br><br>All dimensions in mm. | **4** | **4** | **15** |
| | | | | | |
| | | **UNIT-IV** | | | |
| **7.** | **a).** | State any five desirable properties of good bearing material | **5** | **2** | **5** |
| | **b).** | A journal bearing is proposed for a steam engine. The load on the journal is 3kN, diameter 50mm, length 75mm, speed 1600r.p.m, diametral clearance 0.1mm, and ambient temperature 15.5°C. Oil SAE 10 is used and the film temperature is 60°C. Determine the heat generated and heat dissipated. Take absolute viscosity of SAE10 at 60°C = 0.014 kg/m-s. Also find whether artificial cooling is required or not. | **5** | **4** | **10** |
| | | **OR** | | | |
| **8.** | **a).** | Discuss the advantages of rolling contact bearings over sliding contact bearings | **5** | **2** | **5** |
| | **b).** | A ball bearing is operating as a work cycle connecting of 3 parts. A radial load of 3000 N at 1440r.p.m. for one quarter cycle, a Radial load of 5000 N at 720r.p.m. for one half of the cycle and a radial load of 2500 N at 1440r.p.m. for the remaining cycle. The expected life of the bearing is 10000hrs; Calculate the dynamic load carrying capacity of the bearing. | **5** | **4** | **10** |

| | | | | | |
|---|---|---|---|---|---|
| | | **UNIT-V** | | | |
| **9.** | | Select a wire rope for a vertical mine hoist to lift a load of 50kN from a depth of 250 meters. A rope speed of 480 meters/min is to be attained in 18 seconds | **6** | **4** | **15** |
| | | **OR** | | | |
| **10.** | | Design a chain drive to actuate a compressor from 15KW electric motor running at 1000rpm, the compressor speed being 350rpm.The compressor operates 16hrs/day. The chain tension may be adjusted by shifting the motors. | **6** | **4** | **15** |

**CO-COURSE OUTCOME KL-KNOWLEDGE LEVEL M-MARKS**

**SAGI RAMA KRISHNAM RAJU ENGINEERING COLLEGE (A)**
**[B19ME3204]**
**III B. Tech II Semester (R19) Regular Examinations**
**COMPOSITE MATERIALS**
**(Professional Elective-I)**
**Mechanical Engineering**
**MODEL QUESTION PAPER**

**TIME: 3Hrs.** **Max. Marks: 75 M**

Answer **ONE Question** from **EACH UNIT.**
All questions carry equal marks.
*****

| | | | CO | KL | M |
|---|---|---|---|---|---|
| | | **UNIT-I** | | | |
| **1.** | **a).** | Discuss in brief the classification of composites based on reinforcing material. | **1** | **K2** | **7** |
| | **b).** | Explain the terms Specific Strength and Specific Stiffness with examples. | **1** | **K2** | **8** |
| | | **OR** | | | |
| **2.** | **a).** | Discuss the advantages and limitations of composite materials over conventional materials. | **1** | **K2** | **8** |
| | **b).** | Briefly discuss the types of continuous and discontinuous reinforcements. | **1** | **K2** | **7** |
| | | | | | |
| | | **UNIT-II** | | | |
| **3.** | **a).** | Enumerate dispersion strengthened composites in brief. | **2** | **K3** | **7** |
| | **b).** | Suggest the methods of improving the mechanical properties of the fiber in Glass fiber reinforced composites. | **2** | **K3** | **8** |
| | | **OR** | | | |
| **4.** | **a).** | Explain the basic principle used in fiber reinforced composites? | **2** | **K3** | **8** |
| | **b).** | Discuss the processing and properties of Aramid fibers. | **2** | **K3** | **7** |
| | | | | | |
| | | **UNIT-III** | | | |
| **5.** | **a).** | Discuss the factors that will be considered while selecting a manufacturing method for producing PMC's. | **2** | **K3** | **8** |
| | **b).** | Differentiate Bulk Moulding compound from Sheet moulding compound. | **2** | **K3** | **7** |
| | | **OR** | | | |
| **6.** | **a).** | With neat sketches, explain how pultrusion can be used to produce constant cross-sectional profiles of PMC's. | **2** | **K3** | **7** |
| | **b).** | Describe is structural reaction injection moulding? In what way it is different from Resin transfer moulding? Explain | **2** | **K3** | **8** |
| | | | | | |
| | | **UNIT-IV** | | | |
| **7.** | **a).** | For producing near- net shape a low cost MMC's explain the Technique involved. | **3** | **K3** | **8** |
| | **b).** | In what way C-C composites are superior to other composites? Explain its application in brief. | **3** | **K3** | **7** |
| | | **OR** | | | |
| **8.** | **a).** | Explain chemical vapour deposition method of synthesizing of C-C | **3** | **K3** | **7** |

| | | | | | |
|---|---|---|---|---|---|
| | | composites. | | | |
| | **b).** | With a neat sketch,explain melt stirring (casting) method of producing MMC's and state its limitations. | **3** | **K3** | **8** |
| | | | | | |
| | | **UNIT-V** | | | |
| **9.** | **a).** | Derive the equation for finding the Modulus and strength of Composite under Iso-Stress condition stating the assumptions made. | **4** | **K3** | **8** |
| | **b).** | Using weight or volume fractions, prove that $\rho_c = \rho_t V_t + \rho_m V_m$. | **4** | **K3** | **7** |
| | | **OR** | | | |
| **10.** | **a).** | Explain the composite material with a neat sketch when it is under stressed condition. | **4** | **K3** | **7** |
| | **b).** | Determine the longitudinal modulus and strength of a unidirectional composites containing 65% by volume of carbon fibers ($E_{1f}$= 294 GPa, $\sigma_{1f}$= 5.6 GPa) in a toughened epoxy matrix ($E_m$= 3.6GPa, $\sigma_{mu}$ = 105MPa). Compare these values with the experimentally determined values of$E_1$= 162 GPa, $\sigma_{1u}$= 2.94 GPa) | **4** | **K3** | **8** |

**CO-COURSE OUTCOME KL-KNOWLEDGE LEVEL M-MARKS**

**SAGI RAMA KRISHNAM RAJU ENGINEERING COLLEGE (A)**
**[B19ME3205]**
**III B. Tech II Semester (R 19) Regular Examinations**
**FINITE ELEMENT ANALYSIS**
**(Professional Elective-I)**
**DEPARTMENT OF MECHANICAL ENGINEERING**
**MODEL QUESTION PAPER**

**TIME: 3Hrs.** **Max. Marks:75**

Answer **ONE Question** from **EACH UNIT.**

All questions carry equal marks.

*****

| | | | CO | KL | M |
|---|---|---|---|---|---|
| | | **UNIT-I** | | | |
| **1.** | **a).** | Derive the stress and strain relations for a 3D system. | **1** | **3** | **9** |
| | **b).** | List the applications of Finite Element Analysis. | **1** | **2** | **6** |
| | | **OR** | | | |
| **2.** | **a).** | Discuss in detail about the general procedure of FEM formulation with an example. | **1** | **2** | **8** |
| | **b).** | Discuss in detail about plane stress and plane strain conditions. | **1** | **2** | **7** |
| | | | | | |
| | | **UNIT-II** | | | |
| **3.** | | Consider the bar as shown in Fig. 1 is subjected to a temperature difference of $60^0$C. Determine the nodal displacements and stresses induced in the elements. Take the coefficient of thermal expansions as $18.9 \times 10^{-6}/^0$C (for E=83GPa element), $18.9 \times 10^{-6}/^0$C (for E=70GPa element) and $11.7 \times 10^{-6}/^0$C (for E=200GPa element) respectively. 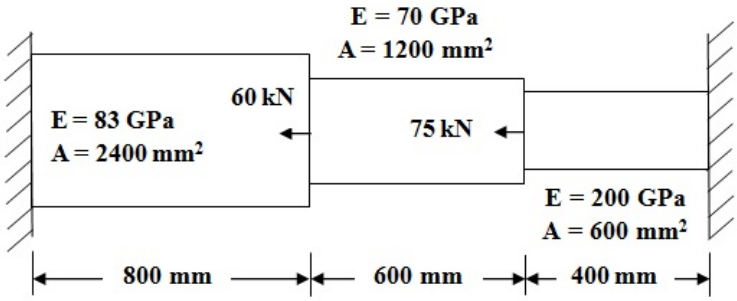  Fig. 1 | **2** | **4** | **15** |
| | | **OR** | | | |
| **4.** | | Derive the elemental stiffness matrix for one dimensional quadratic bar element. | **2** | **3** | **15** |
| | | | | | |
| | | **UNIT-III** | | | |
| **5.** | | For the two-bar truss shown in Fig. 2, determine the displacements of node 1 and the stress in element 1-3. | **3** | **4** | **15** |

| | | | | | |
|---|---|---|---|---|---|
| | | 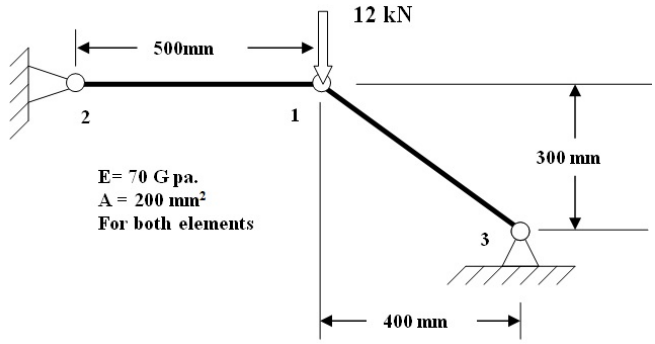 <br>Fig. 2 | | | |
| | | **OR** | | | |
| **6.** | | A beam of 10 m length is fixed at one end and supported by a roller at the other end has a 20 KN concentrated load applied at the centre of the span. Calculate the deflection under the load. Assume E = 20 × $10^5$ N/$mm^2$ and I = 2500 $cm^4$. | **3** | **4** | **15** |
| | | | | | |
| | | **UNIT-IV** | | | |
| **7.** | | For the triangular plate shown in Fig. 3, determine the deflection at the point of load application and also stress induced in the plate using a one element model by considering it as plane stress problem.<br> 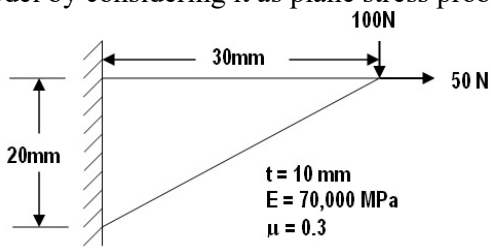 <br>Fig. 3 | **4** | **4** | **15** |
| | | **OR** | | | |
| **8.** | **a).** | Derive the shape functions for the following higher order elements (i) Nine Nodded Quadrilateral Element (ii) Eight Nodded Quadrilateral Element (iii) Six Nodded Triangular Element | **4** | **3** | **9** |
| | **b).** | Evaluate $\int_{-1}^{1}[3e^x + x^2 + \frac{1}{(x+2)}]dx$ integral using one point and two point Gauss quadrature formulae and compare the results with exact solution. | **4** | **3** | **6** |
| | | | | | |
| | | **UNIT-V** | | | |
| **9.** | | Derive the elemental stiffness matrix for 3noded triangular axi symmetric element. | **5** | **3** | **15** |
| | | **OR** | | | |
| **10.** | | An axi-symmetric body with a linearly distributed load on the conical surface is shown in Fig. 4. Determine the equivalent point loads at node 2 (60, 40), 4 (40, 55) and 6 (20, 70). | **5** | **4** | **15** |

| | | | | | |
|---|---|---|---|---|---|
| | | 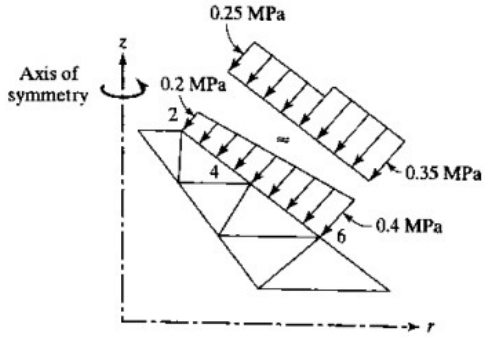 <br>Fig. 4 | | | |

**CO-COURSE OUTCOME** **KL-KNOWLEDGE LEVEL** **M-MARKS**

**SAGI RAMA KRISHNAM RAJU ENGINEERING COLLEGE (A)**
**[B19ME3206]**
**III B. Tech II Semester (R19) Regular Examinations**
**PRODUCTION PLANNING AND CONTROL**
**(Professional Elective-I)**
**Department of Mechanical Engineering**
**MODEL QUESTION PAPER**

**TIME: 3Hrs.** **Max. Marks: 75 M**

Answer **ONE Question** from **EACH UNIT.**
All questions carry equal marks.
*****

| | | | CO | KL | M |
|---|---|---|---|---|---|
| | | **UNIT-I** | | | |
| **1.** | **a).** | What are the functions of PPC? Explain | **CO1** | **K3** | **7M** |
| | **b).** | What are different types of production? Give examples. | **CO1** | **K3** | **7M** |
| | | **OR** | | | |
| **2.** | **a).** | Distinguish between production planning and production control and state their objectives. | **CO1** | **K3** | **7M** |
| | **b).** | Discuss organization of Production planning and control department. | **CO1** | **K3** | **7M** |
| | | | | | |
| | | **UNIT-II** | | | |
| **3.** | **a).** | What are the types of forecasting ? Explain exponential smoothing method. | **CO1** | **K3** | **7M** |
| | **b).** | Use exponential smoothing and the data in the table to determine the un computed monthly forecasts (The slots marked by *x*'s) of 2017. | **CO1** | **K3** | **7M** |

| Month | Actual monthly demand | Monthly demand forecast using a smoothing factor of | | |
|---|---|---|---|---|
| | | 0.2 | 0.5 | 0.8 |
| April | 120 | 120 | 120 | 120 |
| May | 140 | *X* | *x* | *X* |
| June | 160 | *X* | *x* | *X* |
| July | 110 | *X* | *x* | *X* |
| August | 120 | *X* | *x* | *X* |
| September | 110 | *X* | *x* | *X* |
| October | | *X* | *x* | *X* |

| | | | | | |
|---|---|---|---|---|---|
| | | **OR** | | | |
| **4.** | **a).** | Discuss the factors which affect the choice of forecasting method. | **CO1** | **K3** | **7M** |
| | **b).** | Forecast the production for next two years when the production quantity for last ten years is as follows: 200, 225, 235, 240, 255, 260, 265, 275, 270, 271<br>Use the following methods and comment on results<br>i)Moving average (3 years and 5 years)<br>ii) Exponential smoothing for α=0.3 and 0.7 | **CO1** | **K3** | **7M** |
| | | | | | |
| | | **UNIT-III** | | | |
| **5.** | **a).** | Explain the fixed order quantity system and periodic review system. | **CO2** | **K3** | **7M** |
| | **b).** | A manufacturing company purchase 9000 parts of a machine for its annual requirements, ordering one month's usage at a time. Each part costs Rs. 20. The ordering cost per order is Rs.15 and the carrying charges are 15% of the average inventory per year. You have been assigned to suggest a more economical | **CO2** | **K3** | **7M** |

| | | | | | |
|---|---|---|---|---|---|
| | | purchasing policy for the company. What advice would you offer and how much would it save the company per year? | | | |
| | | **OR** | | | |
| **6.** | **a).** | Explain in detail about MRP. | **CO2** | **K3** | **7M** |
| | **b).** | Ten items kept in inventory by the school of management studies at central university are listed below. Perform ABC analysis on the items. | **CO2** | **K3** | **7M** |

| Item | Annual usage (units) | Value per unit (Rs.) |
|---|---|---|
| 1 | 200 | 40.00 |
| 2 | 100 | 360.00 |
| 3 | 2,000 | 0.20 |
| 4 | 400 | 20.00 |
| 5 | 6,000 | 0.04 |
| 6 | 1,200 | 0.80 |
| 7 | 120 | 100.00 |
| 8 | 2,000 | 0.70 |
| 9 | 1,000 | 1.00 |
| 10 | 80 | 400.00 |

| | | | | | |
|---|---|---|---|---|---|
| | | | | | |
| | | **UNIT-IV** | | | |
| **7.** | **a).** | What is aggregate planning? Write its functions, merits and demerits | **CO3** | **K3** | **7M** |
| | **b).** | Define routing and its significance. Explain about the important components of routing sheet? | **CO3** | **K3** | **7M** |
| | | **OR** | | | |
| **8.** | **a).** | What are the factors affecting routing? | **CO3** | **K3** | **7M** |
| | **b).** | What are Gantt charts? Explain with an example. | **CO3** | **K3** | **7M** |
| | | | | | |
| | | **UNIT-V** | | | |
| **9.** | **a).** | Explain in detail about line of balance technique of scheduling | **CO4** | **K3** | **7M** |
| | **b).** | A machine shop has 5 machines – A, B, C, D and E. Two jobs must be processed through each of these machines. The time (in hours) taken on each of the machines and the necessary sequence of jobs through the shop are given below. Use graphic method to obtain minimum elapsed time and the idle times on machines. | **CO4** | **K3** | **7M** |

| | | | | | | |
|---|---|---|---|---|---|---|
| Job-1 | Sequence | A | B | C | D | E |
| | Time | 2 | 3 | 4 | 6 | 2 |
| Job-2 | Sequence | B | C | A | D | E |
| | Time | 4 | 5 | 3 | 2 | 6 |

| | | | | | |
|---|---|---|---|---|---|
| | | **OR** | | | |
| **10.** | **a).** | Explain the dispatching procedure. | **CO4** | **K3** | **7M** |
| | **b).** | What are the applications of computer in production planning and control ? | **CO4** | **K3** | **7M** |

**CO-COURSE OUTCOME** **KL-KNOWLEDGE LEVEL** **M-MARKS**

**SAGI RAMA KRISHNAM RAJU ENGINEERING COLLEGE (A)**
**[B19ME3208]**
**III B. Tech II Semester (R19) Regular Examinations**
**AUTOMOBILE ENGINEERING**
**(Professional Elective-II)**
**Mechanical Department**
**MODEL QUESTION PAPER**

**TIME: 3Hrs.** **Max. Marks: 75 M**

Answer **ONE Question** from **EACH UNIT.**
All questions carry equal marks.
*****

| | | | CO | KL | M |
|---|---|---|---|---|---|
| | | **UNIT-I** | | | |
| **1.** | **a).** | What are the components of an automobile? Explain some of them? | **CO1** | **K2** | **8M** |
| | **b).** | Sketch an automobile Layout and Explain? | **CO1** | **K2** | **7M** |
| | | **OR** | | | |
| **2.** | **a).** | Write short notes on following Engine parts: a) Piston b) Cylinder head c) Piston ring d) Gudgeon pin e) Crankshaft. | **CO1** | **K1** | **8M** |
| | **b).** | Differentiate between Super Charging and Turbo charging? | **CO1** | **K2** | **7M** |
| | | | | | |
| | | **UNIT-II** | | | |
| **3.** | **a).** | How clutches are classified? Explain the construction and operation of single plate clutch. | **CO2** | **K2** | **8M** |
| | **b).** | Explain the working principle of a sliding mesh gear box with neat sketch. | **CO2** | **K2** | **7M** |
| | | **OR** | | | |
| **4.** | **a).** | Explain Automatic Gear box? | **CO2** | **K2** | **7M** |
| | **b).** | Differentiate between CVT and Epicyclical gear box? | **CO2** | **K2** | **8M** |
| | | | | | |
| | | **UNIT-III** | | | |
| **5.** | **a).** | Explain the working of shock absorber with a neat sketch. | **CO3** | **K2** | **8M** |
| | **b).** | What is meant by Wheel alignment? Write short notes on Caster and Camber? | **CO3** | **K2** | **7M** |
| | | **OR** | | | |
| **6.** | **a).** | With the help of a neat sketch, explain the construction and operation of a power steering. | **CO3** | **K2** | **8M** |
| | **b).** | Differentiate between Tube and Tubeless tyres? | **CO3** | **K2** | **7M** |
| | | | | | |
| | | **UNIT-IV** | | | |
| **7.** | **a).** | Explain the working of hydraulic brake system with neat diagram | **CO4** | **K2** | **8M** |
| | **b).** | What is meant by brake bleeding? Explain it | **CO4** | **K2** | **7M** |
| | | **OR** | | | |
| **8.** | **a).** | Explain EGR system with neat diagram. | **CO4** | **K2** | **8M** |
| | **b).** | Discuss about Antilock Braking system? | **CO4** | **K2** | **7M** |
| | | | | | |
| | | **UNIT-V** | | | |
| **9.** | **a).** | Explain about hybrid vehicle drive train structure. | **CO5** | **K2** | **7M** |
| | **b).** | What are the advantages and disadvantages of hybrid vehicles when compared with normal vehicles? | **CO5** | **K2** | **8M** |

| | | | | | |
|---|---|---|---|---|---|
| | | **OR** | | | |
| **10.** | **a).** | What is periodic maintenance? Explain briefly how it is carried out step by step in workshop. | **CO5** | **K2** | **8M** |
| | **b).** | Write short notes on preventive maintenance? | **CO5** | **K2** | **7M** |

**CO-COURSE OUTCOME KL-KNOWLEDGE LEVEL M-MARKS**

**SAGI RAMA KRISHNAM RAJU ENGINEERING COLLEGE (A)**
**[B19ME3209]**
**III B. Tech II Semester (R19) Regular Examinations**
**TOOL DESIGN**
**(Professional Elective-II)**
**Mechanical Engineering Department**
**MODEL QUESTION PAPER**

**TIME: 3Hrs.** **Max. Marks: 75 M**

Answer **ONE Question** from **EACH UNIT.**
All questions carry equal marks.

| | | | CO | KL | M |
|---|---|---|---|---|---|
| | | **UNIT-I** | | | |
| **1.** | **a).** | Describe with a neat sketch 3-2-1 principle of locating a rectangular work piece | **01** | **02** | **07** |
| | **b).** | With a neat sketch explain about mechanical actuation clamping devices. | **01** | **02** | **08** |
| | | **(OR)** | | | |
| **2.** | **a).** | What are the various location devices? Explain these with the aid of suitable sketches. | **01** | **02** | **07** |
| | **b).** | Explain the various types of clamping devices with neat sketch. | **01** | **02** | **08** |
| | | | | | |
| | | **UNIT-II** | | | |
| **3.** | **a).** | Draw a neat sketch of a milling fixture and explain by indicating its parts. | **02** | **02** | **08** |
| | **b).** | Explain in detail about Channel Jig. | **02** | **02** | **07** |
| | | **(OR)** | | | |
| **4.** | **a).** | Explain the principles of lathe and milling fixtures. | **02** | **02** | **07** |
| | **b).** | With a neat sketch explain Turn Over Jigs | **02** | **02** | **08** |
| | | | | | |
| | | **UNIT-III** | | | |
| **5.** | **a).** | Write short notes on strippers, pressure plates and pilots. | **03** | **02** | **07** |
| | **b).** | Determine centre of pressure of the following banked shape. | **03** | **03** | **08** |
| | | 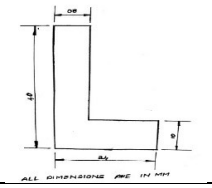 | | | |
| | | **(OR)** | | | |
| **6.** | **a).** | Write short notes about Spring back effect and Bend Allowance | **03** | **02** | **08** |
| | **b).** | What are the factors that effecting drawing Process | **03** | **02** | **07** |
| | | | | | |
| | | **UNIT-IV** | | | |
| **7.** | **a).** | With a neat sketch explain two plate mould. | **04** | **02** | **08** |
| | **b).** | Explain in detail about Blow moulding and calendaring | **04** | **02** | **07** |
| | | **(OR)** | | | |
| **8.** | **a).** | Explain the different types of Die casting Dies. | **04** | **02** | **07** |
| | **b).** | Explain Pressure Die casting process and the Technique of filling the Die Cavity | **04** | **02** | **08** |
| | | | | | |
| | | **UNIT-V** | | | |

| | | | | | |
|---|---|---|---|---|---|
| **9.** | **a).** | Determine the sizes of GO and NOGO gauges for checking the components with $50H_7/f_8$ i.e., $50_{-0.00}^{+0.025}/50_{-0.119}^{+0.08}$ | **05** | **03** | **08** |
| | **b).** | Explain different tooling materials used and their composition. | **05** | **02** | **07** |
| | | **(OR)** | | | |
| **10.** | **a).** | Differentiate Work shop gauge and Inspection gauge | **05** | **02** | **08** |
| | **b).** | Explain the taylor's principle of Gauge Design | **05** | **02** | **07** |

**CO-COURSE OUTCOME KL-KNOWLEDGE LEVEL M-MARKS**

**SAGI RAMA KRISHNAM RAJU ENGINEERING COLLEGE (A)**
**[B19ME3210]**
**III B. Tech II Semester (R19) Regular Examinations**
**UNCONVENTIONAL MACHINING PROCESS**
**(Professional Elective-II)**
**Department of Mechanical Engineering**
**MODEL QUESTION PAPER**

**TIME: 3Hrs.** **Max. Marks: 75 M**

Answer **ONE Question** from **EACH UNIT.**

*****

| | | | CO | KL | M |
|---|---|---|---|---|---|
| | | **UNIT-I** | | | |
| **1.** | **a).** | How the modern machining process are classified based on source of energy, and shapes to be machined? | **CO1** | **KL3** | **8** |
| | **b).** | Explain the merits and demerits of Unconventional machining process over the traditional machining process. | **CO1** | **KL3** | **7** |
| | | **OR** | | | |
| **2.** | **a).** | Compare and contrast the various unconventional machining process based on type of energy employed, material removal rate, transfer media and economical aspects. | **CO1** | **KL3** | **8** |
| | **b).** | Explain under what circumstances the unconventional machining process is considered for machining. | **CO1** | **KL3** | **7** |
| | | | | | |
| | | **UNIT-II** | | | |
| **3.** | **a).** | List out the five important variables of AJM process. Draw a sketch showing the effect of these variables on MRR. | **CO2** | **KL3** | **8** |
| | **b).** | Describe any three typical engineering applications of AWJM and WJM. | **CO2** | **KL3** | **7** |
| | | **OR** | | | |
| **4.** | **a).** | Explain the working principle of the USM process with a neat sketch and list out its applications. | **CO2** | **KL3** | **8** |
| | **b).** | List out the merits and demerits of USM process. | **CO2** | **KL3** | **7** |
| | | | | | |
| | | **UNIT-III** | | | |
| **5.** | **a).** | Explain the function of dielectric fluid in EDM. Name the common dielectric fluids used in EDM. | **CO3** | **KL3** | **8** |
| | **b).** | Explain the principle of Wire EDM with suitable diagram. | **CO3** | **KL3** | **7** |
| | | **OR** | | | |
| **6.** | **a).** | Discuss the advantages of EDM as compared to other non-traditional methods regarding (i) Metal removed rate (ii) Accuracy and Surface finish. | **CO3** | **KL3** | **8** |
| | **b).** | Explain the factors influencing the selection of tool material for electrode. | **CO3** | **KL3** | **7** |
| | | | | | |
| | | **UNIT-IV** | | | |
| **7.** | **a).** | Discuss about the generation of laser during LBM process and their merits and demerits. | **CO3** | **KL3** | **7** |
| | **b).** | With neat sketch, explain the working of Plasma Arc Machining and its applications. | **CO3** | **KL3** | **8** |

| | | | | | |
|---|---|---|---|---|---|
| | | **OR** | | | |
| **8.** | **a).** | Explain the working principle of shaped tube electrolytic machining with neat sketch. | **CO3** | **KL3** | **8** |
| | **b).** | Explain the process of Magnetic abrasive finishing with a neat sketch. | **CO3** | **KL3** | **7** |
| | | | | | |
| | | **UNIT-V** | | | |
| **9.** | **a).** | Sketch and explain electro chemical honing process. | **CO4** | **KL3** | **8** |
| | **b).** | State the considerations of tool design for electrochemical machining and explain the functions of electrolyte. | **CO4** | **KL3** | **7** |
| | | **OR** | | | |
| **10.** | **a).** | Explain the working principle of chemical machining with neat sketch. | **CO4** | **KL3** | **8** |
| | **b).** | What are the various factors to be considered in the selection of Etchants for a particular application? | **CO4** | **KL3** | **7** |

**CO-COURSE OUTCOME KL-KNOWLEDGE LEVEL M-MARKS**